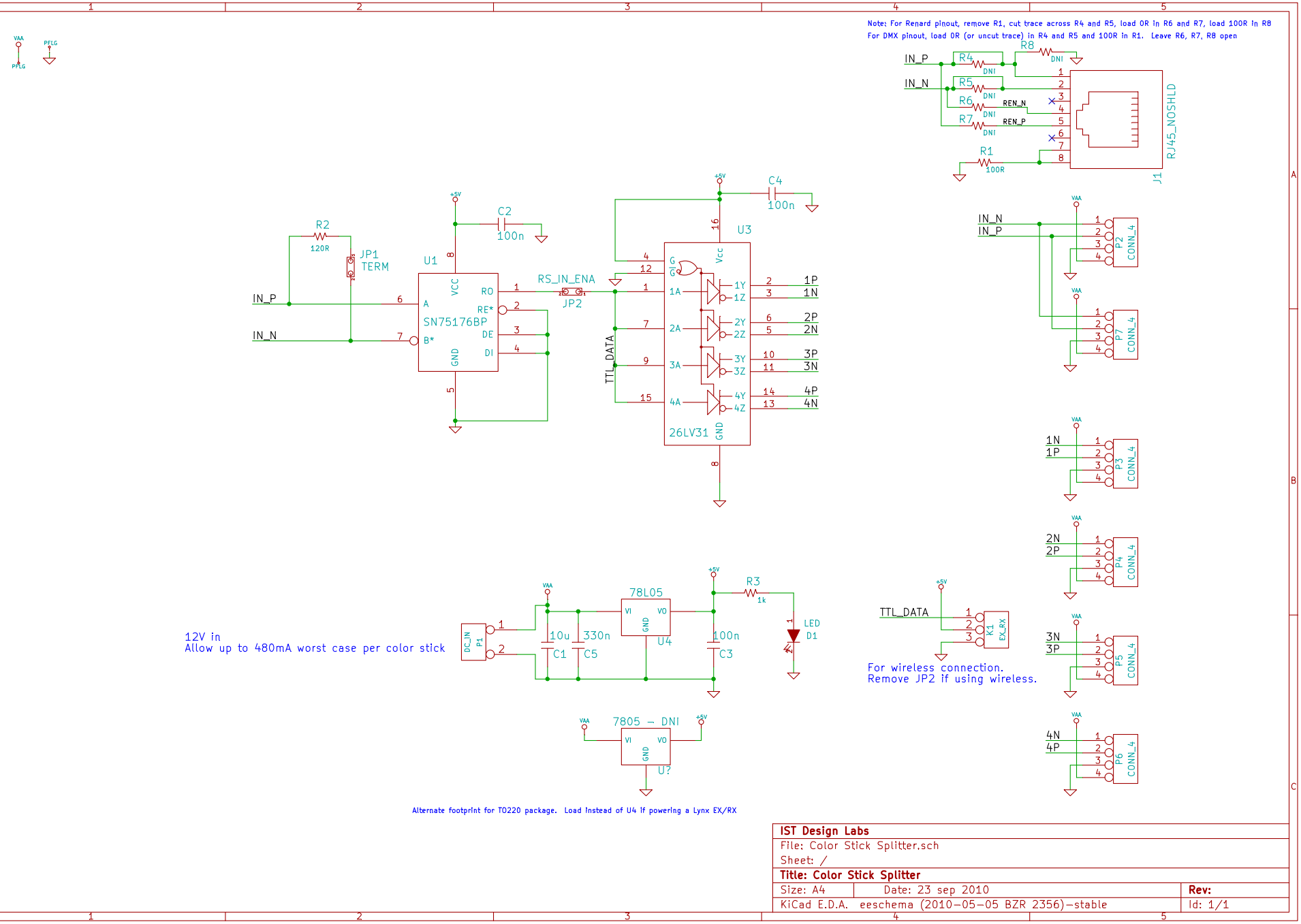

IST Design Labs		
File: Color Stick Splitter.sch		
Sheet: /		
Title: Color Stick Splitter		
Size: A4	Date: 23 sep 2010	**Rev:**
KiCad E.D.A. eeschema (2010-05-05 BZR 2356)-stable		Id: 1/1