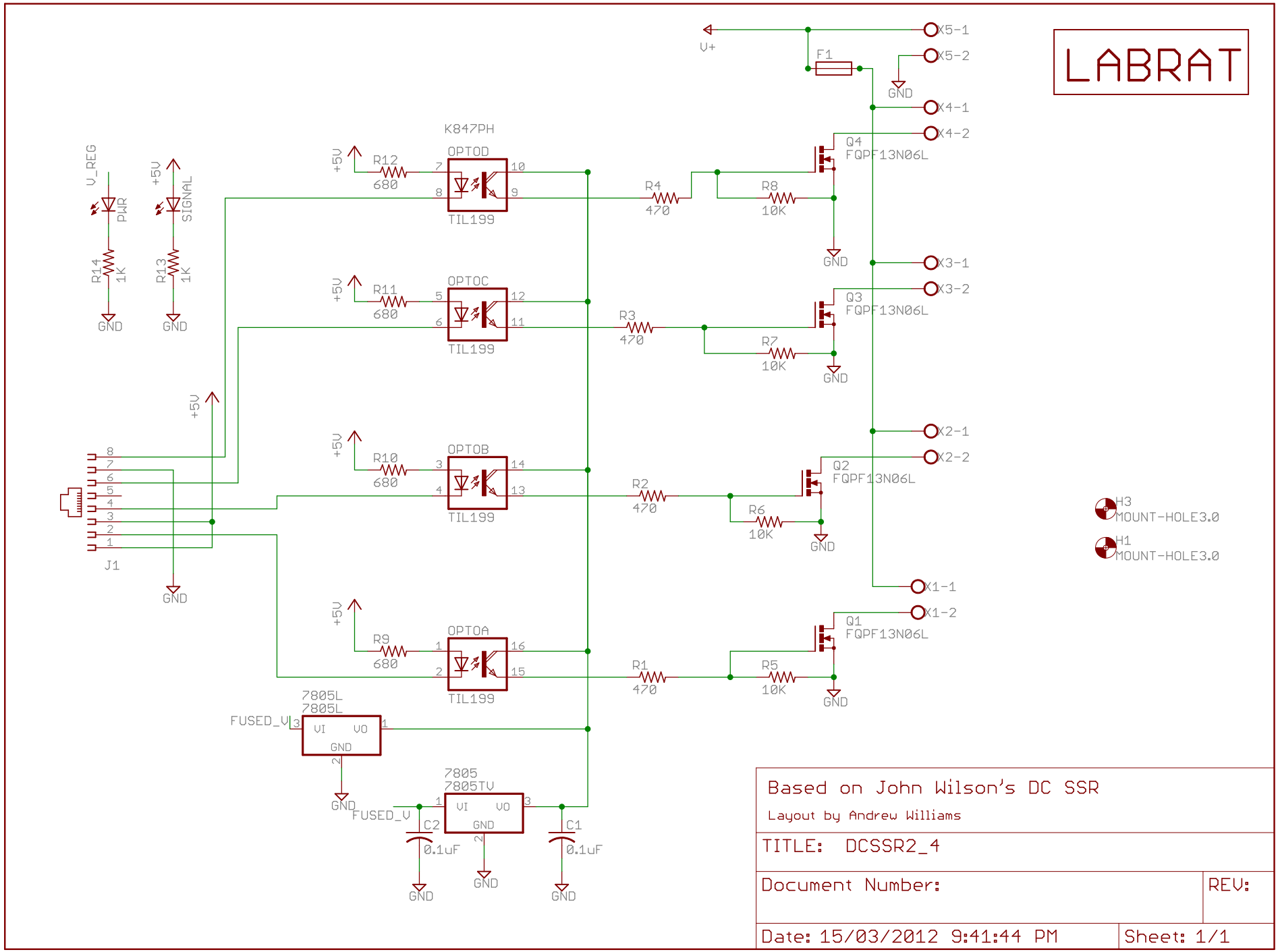

15/03/2012 9:49:31 PM C:\Users\LabRat\Documents\eagle\DCSSR\DCSSR2_4.sch (Sheet: 1/1)