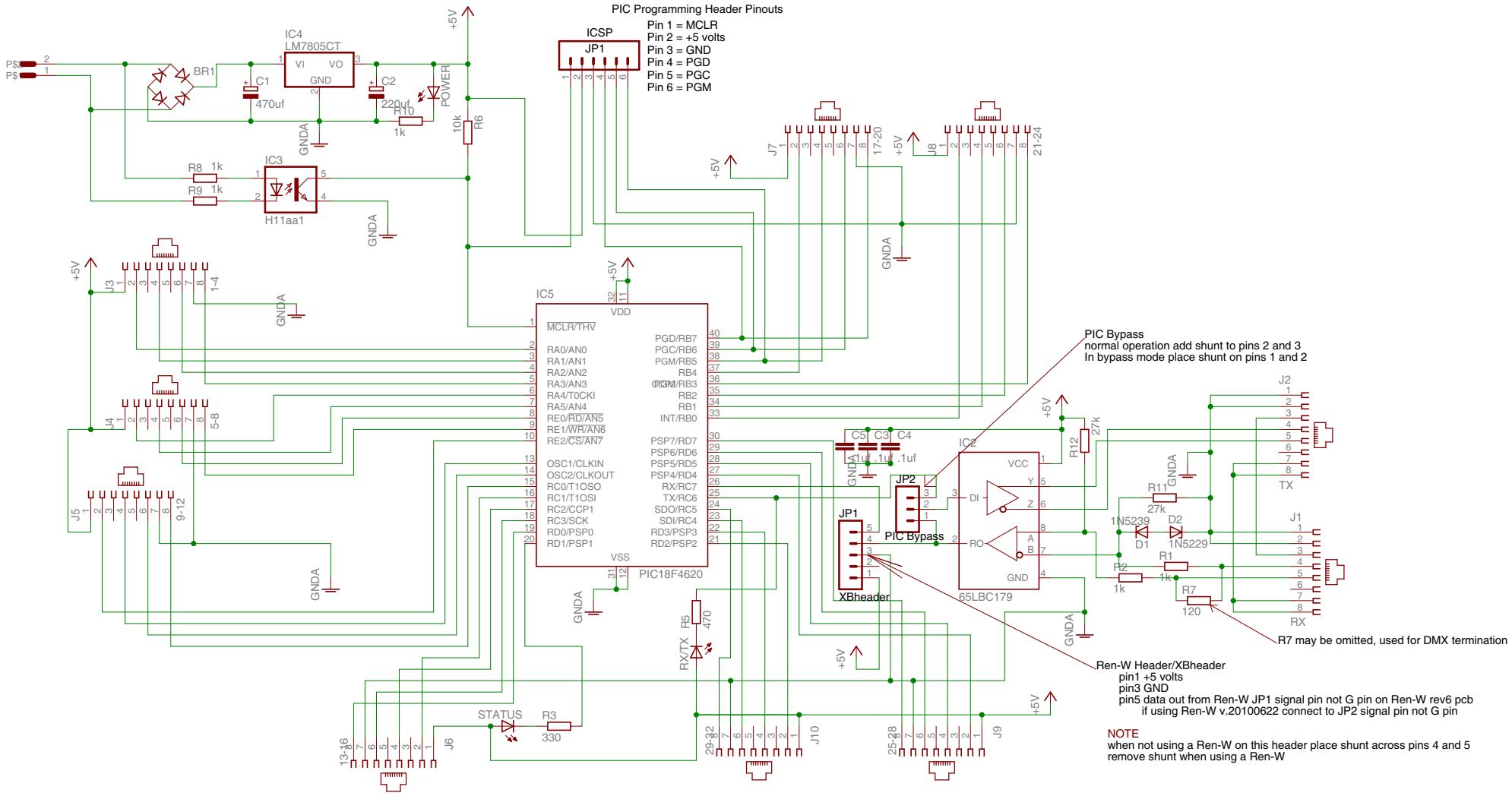
PIC Programming Header Pinouts
Pin 1 = MCLR
Pin 2 = +5 volts
Pin 3 = GND
Pin 4 = PGD
Pin 5 = PGC
Pin 6 = PGM
ICSP
JP1
IC4
LM7805CT
VI
VO
GND
BR1
C1
470uf
C2
220uf
POWER
R10
1k
R6
10k
+5V
GNDA
R8 1k
R9 1k
IC3
H11aa1
J7
17-20
J8
21-24
J3
1-4
J4
5-8
J5
9-12
IC5
VDD
MCLR/THV
RA0/AN0
RA1/AN1
RA2/AN2
RA3/AN3
RA4/T0CKI
RA5/AN4
RE0/RD/AN5
RE1/WR/AN6
RE2/CS/AN7
OSC1/CLKIN
OSC2/CLKOUT
RC0/T1OSO
RC1/T1OSI
RC2/CCP1
RC3/SCK
RD0/PSP0
RD1/PSP1
PGD/RB7
PGC/RB6
PGM/RB5
RB4
PGM/RB3
RB2
RB1
INT/RB0
PSP7/RD7
PSP6/RD6
PSP5/RD5
PSP4/RD4
RX/RC7
TX/RC6
SDO/RC5
SDI/RC4
RD3/PSP3
RD2/PSP2
VSS
PIC18F4620
C5 C3 C4
.1uf .1uf .1uf
JP2
PIC Bypass
JP1
XBheader
IC2
VCC
DI
RO
Y
Z
A
B
GND
65LBC179
R12
27k
R11
27k
1N5239
D1
D2
1N5229
R2
1k
R1
1k
R7
120
J2
TX
J1
RX
R5
470
RX/TX
STATUS
R3
330
J6
13-16
J10
29-32
J9
25-28
PIC Bypass
normal operation add shunt to pins 2 and 3
In bypass mode place shunt on pins 1 and 2
R7 may be omitted, used for DMX termination
Ren-W Header/XBheader
pin1 +5 volts
pin3 GND
pin5 data out from Ren-W JP1 signal pin not G pin on Ren-W rev6 pcb
if using Ren-W v.20100622 connect to JP2 signal pin not G pin
NOTE
when not using a Ren-W on this header place shunt across pins 4 and 5
remove shunt when using a Ren-W